1SMA5913A - 1SMA5957A

SURFACE MOUNT SILICON ZENER DIODES

V_Z : 3.3 - 240 Volts
P_D : 1.5 Watts

FEATURES :
* Complete Voltage Range 3.3 to 240 Volts
* High peak reverse power dissipation
* High reliability
* Low leakage current
* Pb / RoHS Free

MECHANICAL DATA :
* Case : SMA Molded plastic
* Epoxy : UL94V-O rate flame retardant
* Polarity : Color band denotes cathode end
* Mounting position : Any
* Weight : 0.060 gram (Approximately)

SMA

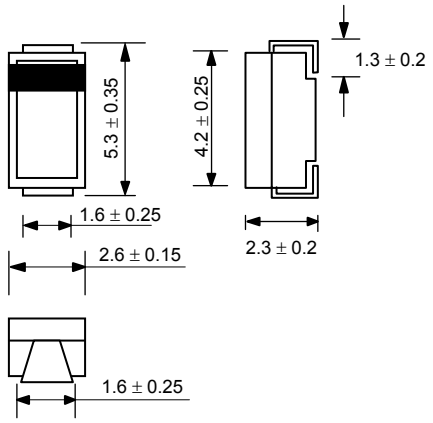

Dimensions in millimeters

MAXIMUM RATINGS
Rating at 25 °C ambient temperature unless otherwise specified

Rating	Symbol	Value	Unit
DC Power Dissipation @ T_L = 75 °C	P_D	1.5	W
Measured zero lead length(1" square copper pad, FR-4 board)		20	mW/°C
Derate above 75 °C			
Thermal Resistance Junction to Lead	$R_{\Theta JL}$	50	°C/W
DC Power Dissipation @ Ta = 25 °C	P_D	0.5	W
(FR-4 board) Derate above 25 °C		4.0	mW/°C
Thermal Resistance Junction to Ambient	$R_{\Theta JA}$	250	°C/W
Maximum Forward Voltage at I_F = 200 mA	V_F	1.5	V
Operating Junction and Storang Temperature Range	T_J, T_{STG}	- 65 to + 150	°C

Fig. 1 POWER TEMPERATURE DERATING CURVE

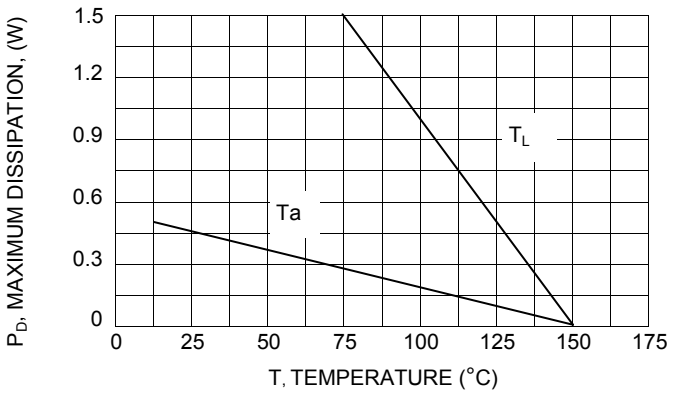

ELECTRICAL CHARACTERISTICS

Rating at 25 °C ambient temperature unless otherwise specified

TYPE	Nominal Zener Voltage		Maximum Zener Impedance			Maximum Reverse Leakage Current		Maximum DC Zener Current
	V_Z @ I_{ZT}	I_{ZT}	Z_{ZT} @ I_{ZT}	Z_{ZK} @ I_{ZK}	I_{ZK}	I_R @	V_R	I_{ZM}
	(V)	(mA)	(Ω)	(Ω)	(mA)	(μA)	(V)	(mA)
1SMA5913A	3.3	113.6	10	500	1.0	100	1.0	454
1SMA5914A	3.6	104.2	9.0	500	1.0	75	1.0	416
1SMA5915A	3.9	96.1	7.5	500	1.0	25	1.0	384
1SMA5916A	4.3	87.2	6.0	500	1.0	5.0	1.0	348
1SMA5917A	4.7	79.8	5.0	500	1.0	5.0	1.5	319
1SMA5918A	5.1	73.5	4.0	500	1.0	5.0	2.0	294
1SMA5919A	5.6	66.9	2.0	500	1.0	5.0	3.0	267
1SMA5920A	6.2	60.5	2.0	200	1.0	5.0	4.0	241
1SMA5921A	6.8	55.1	2.5	200	1.0	50	5.2	220
1SMA5922A	7.5	50.0	3.0	400	0.5	50	6.0	200
1SMA5923A	8.2	45.7	3.5	400	0.5	50	6.5	182
1SMA5924A	9.1	41.2	4.0	500	0.5	50	7.0	164
1SMA5925A	10	37.5	4.5	500	0.25	50	8.0	150
1SMA5926A	11	34.1	5.5	550	0.25	50	8.4	136
1SMA5927A	12	31.2	6.5	550	0.25	1.0	9.1	125
1SMA5928A	13	28.8	7.0	550	0.25	1.0	9.9	115
1SMA5929A	15	25.0	9.0	600	0.25	1.0	11.4	100
1SMA5930A	16	23.4	10	600	0.25	1.0	12.2	93
1SMA5931A	18	20.8	12	650	0.25	1.0	13.7	83
1SMA5932A	20	18.7	14	650	0.25	1.0	15.2	75
1SMA5933A	22	17.0	17.5	650	0.25	1.0	16.7	68
1SMA5934A	24	15.6	19	700	0.25	1.0	18.2	62
1SMA5935A	27	13.9	23	700	0.25	1.0	20.6	55
1SMA5936A	30	12.5	26	750	0.25	1.0	22.8	50
1SMA5937A	33	11.4	33	800	0.25	1.0	25.1	45
1SMA5938A	36	10.4	38	850	0.25	1.0	27.4	41
1SMA5939A	39	9.6	45	900	0.25	1.0	29.7	38
1SMA5940A	43	8.7	53	950	0.25	1.0	32.7	34
1SMA5941A	47	8.0	67	1000	0.25	1.0	35.8	31
1SMA5942A	51	7.3	70	1100	0.25	1.0	38.8	29
1SMA5943A	56	6.7	86	1300	0.25	1.0	42.6	26
1SMA5944A	62	6.0	100	1500	0.25	1.0	47.1	24
1SMA5945A	68	5.5	120	1700	0.25	1.0	51.7	22
1SMA5946A	75	5.0	140	2000	0.25	1.0	56.0	20
1SMA5947A	82	4.6	160	2500	0.25	1.0	62.2	18
1SMA5948A	91	4.1	200	3000	0.25	1.0	69.2	16
1SMA5949A	100	3.7	250	3100	0.25	1.0	76.0	15
1SMA5950A	110	3.4	300	4000	0.25	1.0	83.6	13
1SMA5951A	120	3.1	380	4500	0.25	1.0	91.2	12
1SMA5952A	130	2.9	450	5000	0.25	1.0	98.8	11
1SMA5953A	150	2.5	600	6000	0.25	1.0	114.0	10
1SMA5954A	160	2.3	700	6500	0.25	1.0	121.6	9.0
1SMA5955A	180	2.1	900	7000	0.25	1.0	136.8	8.0
1SMA5956A	200	1.9	1200	8000	0.25	1.0	152.0	7.0
1SMA5957A	240	1.5	1600	9000	0.25	1.0	182.4	6.0

Note :

(1) Suffix "A " indicates ± 10% tolerance, suffix " B " indicates ± 5% tolerance.